Falcon 7X

Electrical Systems

© All rights reserved Wilco Publishing – Dassault Aviation.
Falcon and logos are trademarks of Dassault Aviation.

Contents

Introduction 2
Acronyms 3
Flight Deck Overview 4
Controls 4
Indications 4
Power Generation and Energy Storage 6
General 6
Engine-Driven Generators 6
APU Generator 6
Ram Air Turbine 7
PMA 7
GPU 8
Power Distribution 8
General 8
Design Principles 9
Technology 9
Architecture 9
Control 10
DC Supply Control Panel 10
Emergency Control Panel 17
RAT Manual Release Handle 18
Indications 19
Electrical Synoptic Page 19
Status Synoptic Page 19
Illustrations 20

Introduction

The Falcon 7X uses 28 Volts DC power for operation of the various systems installed in the airplane.

The electrical system is supplied by:

- Three engine-driven generators,
- Two Batteries,
- A Ram Air Turbine (RAT) in some emergency cases.

The Primary Flight Control System and Engine Electronic Controller are also powered by dedicated Permanent Magnet Alternators.

On ground, the electrical system can also be supplied by:

- An Auxiliary Power Unit (APU) driven generator,
- An external 28 DC GPU (Ground Power Unit).

The different electrical power sources provide power to six buses installed in two Primary Distribution Boxes:

- LH ESSential and LH MAIN buses,
- RH ESSential and RH MAIN buses,
- Batt 1 and Batt 2 buses.

Electrical Power is distributed from the two Primary Power Distribution Boxes (PPDB) toward four Secondary Power Distribution Boxes (SPPD) installed forward and aft of the airplane, on the Right and Left Hand sides.

Protection of equipment, cables, and electrical buses is provided by different control boards, by fuses and by mechanical and electronic Circuit Breakers (CB).

The Emergency lighting system is fitted with dedicated batteries.

Acronyms

AC	Alternative Current
APU	Auxiliary Power Unit
BC	Battery Contactor
BIT	Built In Test
BTC	Bus Tie Contactor
CAS	Crew Alerting System
CB	Circuit Breaker
CLSC	Cabin Load Shed Contactor
CMC	Central Maintenance Computer
DC	Direct Current
ECU	Electronic Control Unit
EEC	Engine Electronic Controller
FADEC	Full Authority Digital Electronic Control
FBW	Fly By Wire
GCU	Generator Control Unit
GLC	Generator Line Contactor
GLSC	Galley Load Shed Contactor
GPC	Ground Power Contactor
GPU	Ground Power Unit
GSB	Ground Service Bus
LFSPDB	Left Front Secondary Power Distribution Box
LH	Left Hand
LPPDB	Left Primary Power Distribution Box
LRSPDB	Left Rear Secondary Power Distribution Box
LS	Load shed
MAU	Modular Avionic Unit
MDU	Multi function Display Unit
MMEL	Master Minimum Equipment List
O/C	OverCurrent
OP	Overhead Panel
OVHT	OVerHeaT
PDCU	Power Distribution Control Unit
PFCS	Primary Flight Control System
PMA	Permanent Magnet Alternator
PPDB	Primary Power Distribution Box
RAT	Ram Air Turbine
RATC	Ram Air Turbine Contactor

Flight Deck Overview

Controls

Crew has control over the electrical system via:

- The “DC SUPPLY" Panel on the overhead panel.
- The ELEC synoptic page on MDU 2.
- Two switches on the Emergency Panel (aft end of the pedestal) for RAT inhibit and "RH ESS ISOL".
- The RAT Manual Release Handle (right side of the pedestal).
- The Fire Control Panel in case of engine fire, to confirm generator disconnection.

Indications

Indications related to the Electrical System configuration and status are displayed in:

- The "DC SUPPLY" Panel (on the overhead panel),
- The ELECtrical System Synoptic and subpage "Circuit Breaker".
- The TEST synoptic page.
- The ENG-CAS window for CAS messages.
- The STATus synoptic / FAULT tab for fault messages.

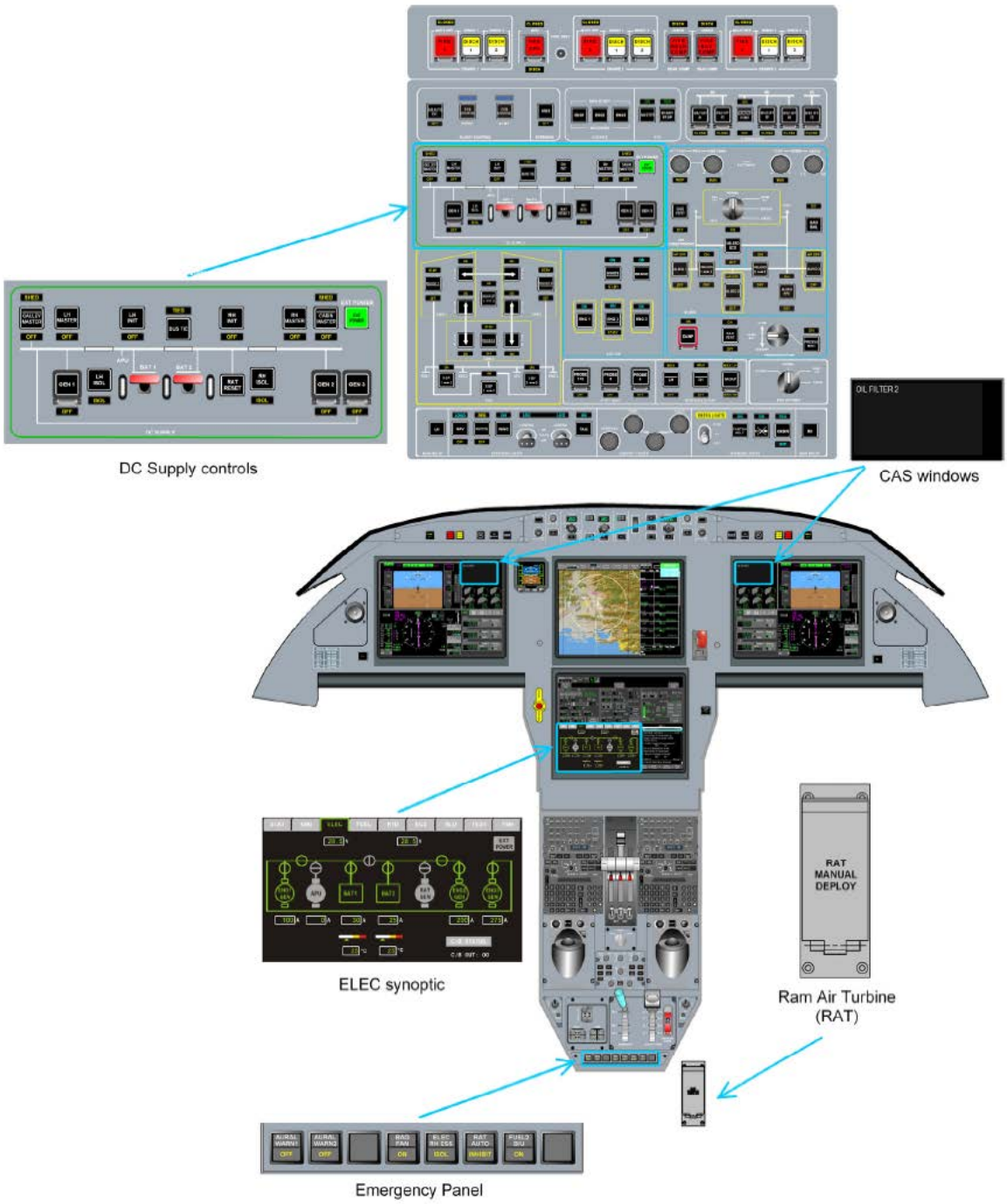

Figure 1 FLIGHT DECK OVERVIEW

Power Generation and Energy Storage

General

In flight, 28Vdc generation is provided by:

- 3 engine driven generators: 12kW (500 A),
- A RAT (Ram Air Turbine) which can provide a non time limited electrical power (9 kW) to LH and RH Essential Buses.

On ground, the 28Vdc generation is provided by:

- An APU starter-generator: 12 kW (400 A),
- A 28Vdc GPU which can be connected to the airplane to energize the entire electrical system.
- Two PMA (Engines 1 and 2) provide an independent source of electrical power for the PFCS.
- Three PMA (Engines 1, 2 and 3) provide an independent source of electrical power to Engine Electronic Controllers EEC.

Electrical energy is stored in two 24 V dc (25 Ah) lead-acid batteries.

Engine-Driven Generators

Engine-driven generators are driven by the accessory gearbox of each engine.

Engine driven generators are rated at 12 kW, but they can provide 15 kW for a limited time in case of a generator failure. They are regulated at 28.5 VDC by a Generator Control Unit (GCU) associated to each engine.

Each GCU provides current and voltage control and protection for its associated generator.

APU Generator

The Auxiliary Power Unit (APU) is equipped with a starter-generator. As a generator and for ground use only, it provides DC power to airplane systems and batteries charging.

The APU is rated at 12 kW and regulated at 28.5 VDC by its associated GCU.

The APU Generator Control Unit (GCU):

- Provides current and voltage control and protection for its associated generator.
- Controls APU start sequence.

Ram Air Turbine

The Ram Air Turbine (RAT) system provides a non-time limited electrical power source 9kw to the RH and LH ESS bus for continued safe flight and landing in case of:

- Loss of all three engines (automatic deployment).
- Loss of all three engine generators (automatic deployment).
- Loss of engine 2 generator and short on LH ESS bus (manual deployment).
- Loss of engine 2 generator and BUS TIE contactor failed open (manual deployment).

When operative, the RAT will charge the airplane batteries.

When the airplane speed is low (approach and landing), the RAT generator output voltage is reduced, and batteries start providing power. In this manner both the RAT and batteries power all the required airplane loads during this phase.

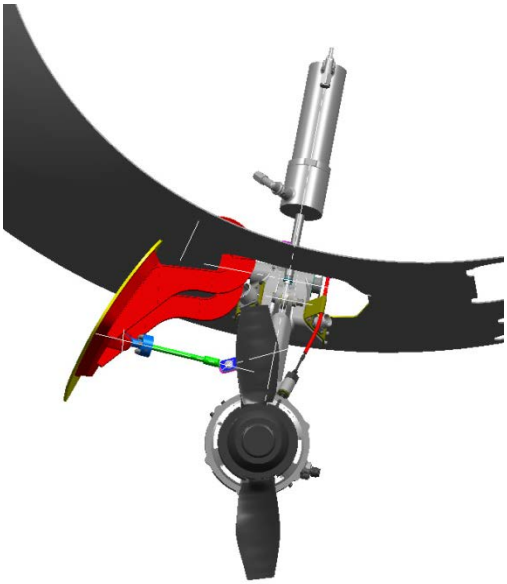

Figure 2 RAT IN THE DEPLOYED POSITION

PMA

Two PMA (Permanent Magnet Alternator) driven by engines 1 and 2 provide an independent source of power to the Primary Flight Control system.

Three PMA driven by each engine provide an independent source of AC power for their respective EEC (Engine Electronic Controller).

GPU

An approved 28 VDC Ground Power Unit (GPU) may be used for prolonged periods to power the DC system in order to facilitate maintenance and servicing.

The GPU may also be used:

- For APU starting (recommended power is 1,000 A).
- To charge the batteries.

The GPU will not provide power to the distribution system simultaneously with APU generator or engine-driven generators. Order of priority is the following:

- The APU generator will provide power to the distribution system only once the GPU is off line.
- The GPU is automatically disconnected from electrical buses when one engine-driven generator comes on line.

Power Distribution

General

The different electrical power sources provide power to six buses:

- BATT1 bus: powered by battery 1 or APU generator.
- LH MAIN bus: powered by Engines 1 and 3 generators.
- LH ESSential bus: powered by BATT1 bus.
- BATT2 bus: powered by battery 2.
- RH ESSential bus: powered by BATT2 bus, and potentially by the RAT generator.
- RH MAIN bus: powered by Engine 2 generator.

An additional bus is considered for preflight use only: Ground Servicing Bus.

The six buses are gathered in two Primary Distribution Boxes:

LH PPDB contains:

- LH MAIN and ESSential buses,
- BATT1 bus

RH PPDB contains:

- RH MAIN and ESSential buses,
- BATT2 bus

Power is distributed from the two Primary Power Distribution Boxes (PPDB) toward:

- The four Secondary Power Distribution Boxes (SPDB),
- Galley and cabin loads,
- Hot loads,
- Some PFCS loads.

Design Principles

The electrical system was designed considering technology, architecture, safety and maintenance design principles.

Technology

Since a low level of loads is required by airplane equipment, the electrical system circuit is a 28Vdc design. This allows simplification for circuit control and a good level of reliability without significant increase in weight.

Architecture

If the engines are running, the engines controllers and PFCS remain powered by dedicated power sources even if the airplane distribution system is not available.

Non time limited electrical power is available in case of all engines out or all generators failed, by a RAT.

In case of normal generation failure, the RAT system was selected rather than using the APU generator in flight: this way, the electrical system architecture is not affected by fuel contamination.

The galley and cabin load are directly powered from the PPDB in order to facilitate load shedding logic.

Some PFCS loads are directly powered from the PPDB in order to be segregated from other system loads and to allow load shedding of SPDB in case of loss of engine-driven generators.

Control

Crew has control on the electrical system via:

- The DC SUPPLY Panel on the overhead panel,
- Two switches on the Emergency Panel (aft end of the pedestal) for RAT AUTO and ELEC RH ESS,
- The RAT Manual Release Handle (right side of the pedestal),
- TEST synoptic page for the RAT test,
- The Fire Control Panel in case of engine fire, to confirm generator disconnection,
- The Maintenance panel for "ground servicing bus",
- The C/B STATUS sub-page page of the ELECtrical synoptic page, on ground, for changing electronic CB status.

DC Supply Control Panel

Pilots can manually control the Electrical System via the switches in the DC SUPPLY overhead panel.

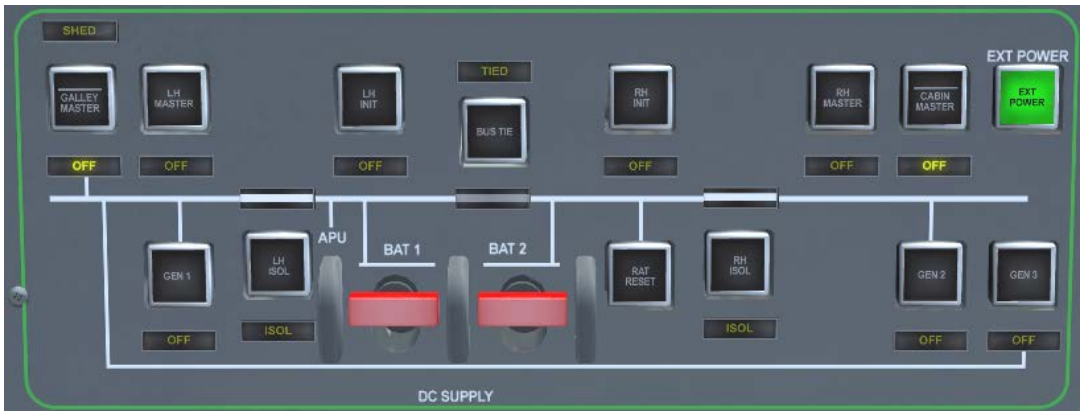

Figure 3 DC SUPPLY SECTION OF THE OVERHEAD PANEL

CONTROL	FUNCTION	TO ACTIVATE TO DEACTIVATE	SYNOPTIC
   	- GEN 1 connects generator 1 to the LH MAIN bus - GEN 2 connects generator 2 to the RH MAIN bus - GEN 3 connects generator 3 to the LH MAIN bus	 Auto: allow GCU to automatically control the corresponding generator.	Generator is connected
			Generator is not connected conformaly to normal operation: - Engine is stopped.
		 OFF: allow to manually disconnect the corresponding generator	Generator is disconnected: - Commanded by the crewmembers.
			Generator is not connected due to a malfunction, while engine is running.

CONTROL	FUNCTION	TO ACTIVATE / TO DEACTIVATE	SYNOPTIC
Two-position trip magnetic switch Two-position trip magnetic switch	- BAT 1 connects battery 1 bus to the LH ESS bus and contactor is controlled by PDCU **NOTE** Battery 1 supplies the battery bus whatever battery switch position. - BAT 2 connects battery 2 bus to the RH ESS bus and contactor is controlled by PDCU - BAT 1 or 2 trips automatically to down position when the system detects an anomaly (high reverse current) - BAT 1 and 2 act as reset switches when the fault is cleared	BAT1 Connected and controlled by PDCU	BAT1 is connected (except APU starting)
			BAT1 is disconnected during APU starting
			Abnormal situation: BAT1 is disconnected due to a malfunction
		BAT1 Disconnected	BAT1 is disconnected
			Abnormal situation: BAT1 is connected while it should be disconnected

CONTROL	FUNCTION	TO ACTIVATE / TO DEACTIVATE	SYNOPTIC
EXT POWER light pushbutton	On ground only: allows external power to supply LH ESS bus	EXT POWER Push On (System feedback)	On: airplane powered by external power. EXT POWER
			Abnormal operation: airplane powered by external power and fault conditions or current < 400 A EXT POWER
		EXT POWER Flash	Abnormal operation: extenal power is connected and at least one engine generator is connected. EXT POWER
		EXT POWER Push Off	Off: airplane not powered by external power. EXT POWER

CONTROL	FUNCTION	TO ACTIVATE / TO DEACTIVATE	SYNOPTIC
	Ties up LH ESS and RH ESS buses	Push unlighted auto	Buses normally untied
			Buses abnormally tied
		Push TIED	Buses tied as commanded
			Buses abnormally untied
	Isolates LH / RH MAIN buses from respective LH / RH ESS buses	Push unlighted auto	Buses normally tied
			Buses abnormally isolated
		Push ISOL	Buses isolated as commanded
			Buses abnormally tied

CONTROL	FUNCTION	TO ACTIVATE / TO DEACTIVATE	SYNOPTIC
	- Sheds cabin optional equipment load from the LH MAIN and RH MAIN buses o Short push: alternates between "Auto" and "OFF" o Long push: SHED - Auto: contactor is connected and controlled by PDCU, closed if condition is acceptable. - OFF: contactor is disconnected and also GALLEY one. - SHED: allows to recover some pre determined loads after automatic shed.	Auto	No specific indication on the ELEC synoptic
		SHED	
		OFF	
	- Sheds galley equipment load from the LH bus: o Short push: alternates between "Auto" and "OFF" o Long push: SHED - Auto: contactor is connected and controlled by PDCU, closed if condition is acceptable. - OFF: contactor is disconnected - SHED: allows to recover some pre determined loads after automatic shed.	Auto	No specific indication on the ELEC synoptic
		SHED	
		OFF	

CONTROL	FUNCTION	TO ACTIVATE / TO DEACTIVATE		SYNOPTIC
	Supplies power to LH MAIN and LH ESS buses avionics equipment	Push on (connected)		No specific indication on the ELEC synoptic
		Push OFF (not connected)		
	Supplies power to RH MAIN bus equipment	Push on (connected)		No specific indication on the ELEC synoptic
		Push OFF (not connected)		
	Supplies power to LH ESS bus equipment	Push on (connected)		No specific indication on the ELEC synoptic
		Push OFF (not connected)		
	Supplies power to RH ESS bus equipment	Push on (connected)		No specific indication on the ELEC synoptic
		Push OFF (not connected)		

CONTROL	FUNCTION	TO ACTIVATE / TO DEACTIVATE	SYNOPTIC
momentary pushbutton	Resets RAT GEN in case of disconnection due to over-current	No indication	

Emergency Control Panel

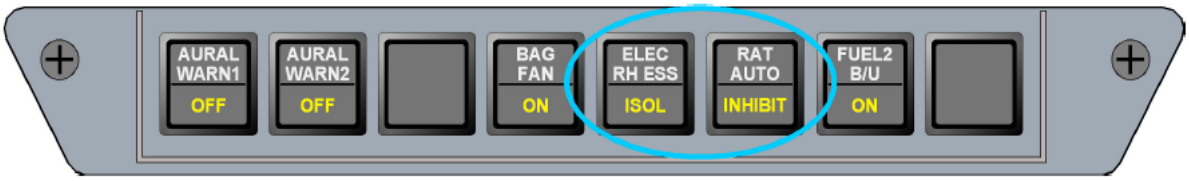

Figure 4 EMERGENCY CONTROL PANEL, ON PEDESTAL

CONTROL	FUNCTION	TO ACTIVATE / TO DEACTIVATE		SYNOPTIC
ELEC RH ESS pushbutton on Emergency Panel:	- Isolates RH ESS bus and forces the connection of BAT 2	Normal off		No specific indication on the ELEC synoptic.
		Push ISOL		
RAT AUTO pushbutton on Emergency Panel:	- prohibites the automatic deployment of RAT	Normal off		No specific indication on the ELEC synoptic. Advisory CAS message is displayed: ELEC: RAT AUTO INHIBIT
		Push INHIBIT		

RAT Manual Release Handle

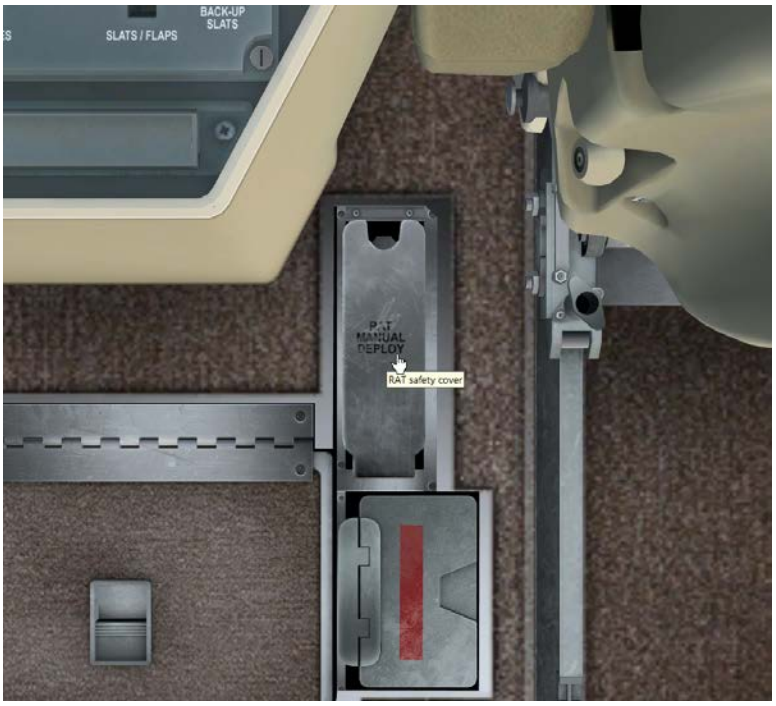

The release handle used to manually deploy the RAT is located on the cockpit floor to the left side of the copilot's seat.

Figure 5 MANUAL RELEASE COVER AND MANUAL RELEASE HANDLE

The release handle is protected from inadvertent release by a cover.

Indications

Electrical Synoptic Page

Located on MDU 2.

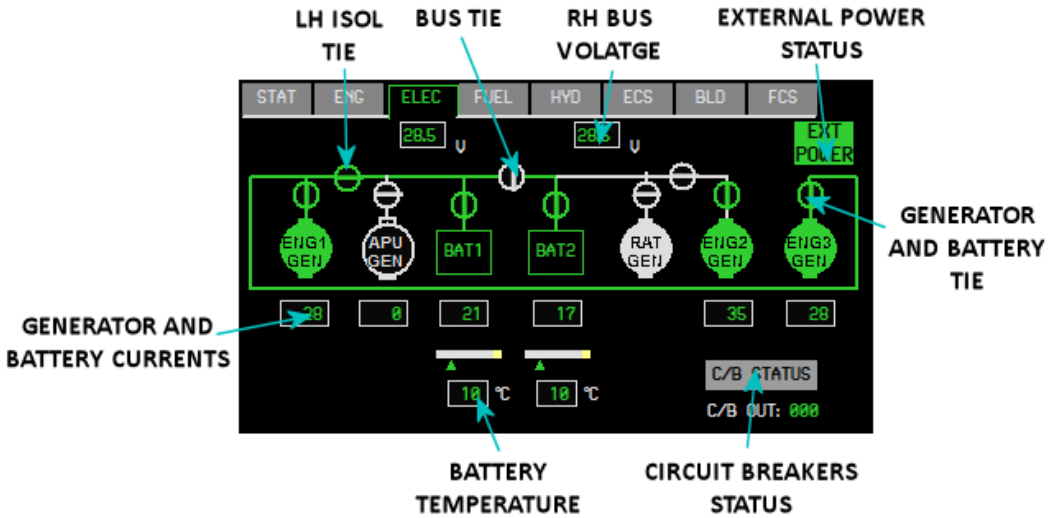

Figure 6 ELEC SYNOPTIC PAGE

Status Synoptic Page

At the top of the STATus page, following information on the electrical system are summarized:

- LH and RH buses voltages,
- Generators and batteries amperage.

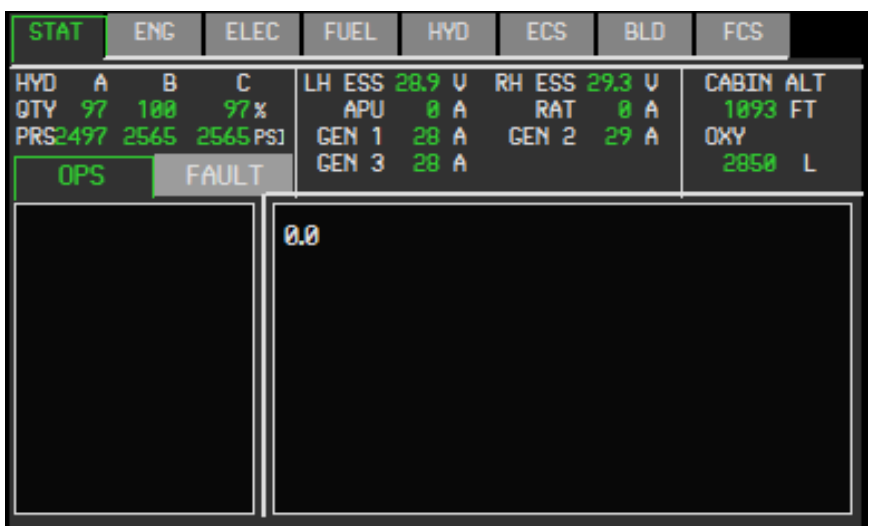

Figure 7 STATUS/ FAULT SYNOPTIC PAGE

Illustrations

Figure 1 FLIGHT DECK OVERVIEW 5
Figure 2 RAT IN THE DEPLOYED POSITION 7
Figure 3 DC SUPPLY SECTION OF THE OVERHEAD PANEL 10
Figure 4 EMERGENCY CONTROL PANEL, ON PEDESTAL 17
Figure 5 MANUAL RELEASE COVER AND MANUAL RELEASE HANDLE 18
Figure 6 ELEC SYNOPTIC PAGE 19
Figure 7 STATUS/ FAULT SYNOPTIC PAGE 19